www.abcnc.pl

POWRÓT DO STRONY GŁÓWNEJ

IKO

For special environment

Linear Motion Rolling Guide series

Challenging the new frontier of special environment with fresh ideas and long experiences.

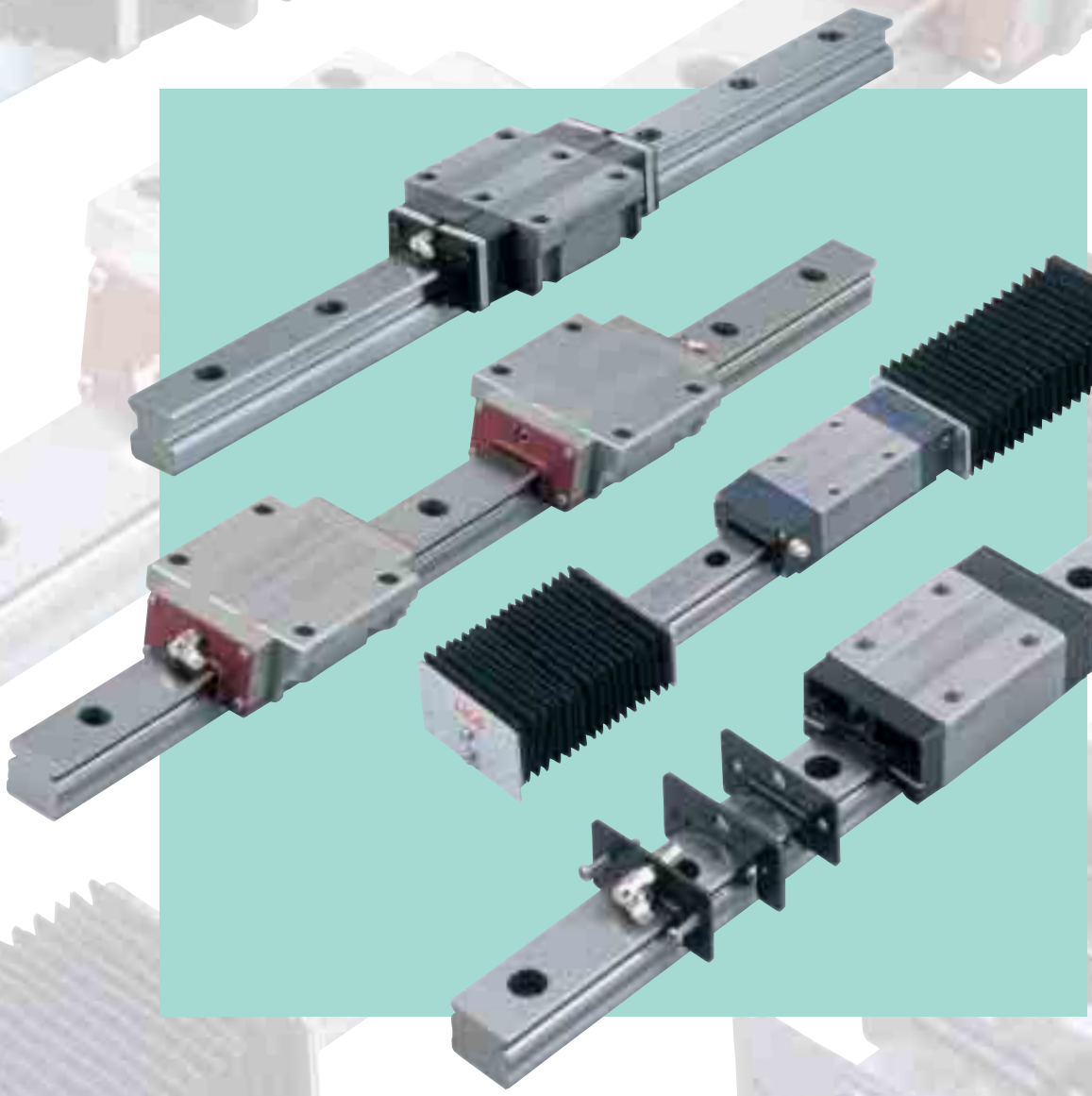

CAT-5919D

IKO Linear Motion Rolling Guide for special environment

IKO Linear Motion Rolling Guide series are used in a wide range of fields, including industrial robots, machine tools, and semiconductor-manufacturing equipment. Their operating conditions and environment are becoming increasingly diverse year by year.
IKO has been engaged in the development of products to meet these different needs, drawing on the company's long experience in the fields, putting in fresh original ideas, and making them available to the customers. These activities have led to the steady expansion of the series for special environment.
This brochure presents Linear Motion Rolling Guide series for special environment that ensure reliable use under the diverse environmental conditions.
Please select the IKO Linear Motion Rolling Guide best suited for your particular needs, from among the wide range of products and special specifications.

Fields of application and specifications of Linear Motion Rolling Guide

To meet the requirements in various environmental conditions, Linear Motion Rolling Guide must be modified in material, lubricating grease, surface treatment, dust-protection method, etc. General fields of application in special environment and available specifications of Linear Motion Rolling Guide series are shown below. Please consult IKO for further information.

○ Linear Motion Rolling Guide series for special environment
Series suitable for use in special environment
● Optional special specifications for special environment
Special specifications applicable to Linear Motion Rolling Guide series for adapting the product to special environment
◇ Lubricant
Lubricant available for special environment

Special Environment

Rust prevention
- ○ Stainless Linear Way L
- ○ Stainless Linear Way E
- ○ Stainless Linear Way H
- ○ Stainless Linear Way F
- ○ Stainless Linear Roller Way Super X
- ● Black chrome surface treatment

Clean environment
- ○ Stainless Linear Way L
- ○ Stainless Linear Way E
- ○ Stainless Linear Way H
- ○ Stainless Linear Way F
- ○ Stainless Linear Roller Way Super X
- ● Black chrome surface treatment
- ● Specified grease (IKO CG2 grease)
- ◇ Fluorinated grease

Vacuum environment
- ● No end seals
- ● With stainless steel end plates
- ◇ Fluorinated grease

Welding spatter protection
- ● With scrapers
- ● With caps for rail mounting holes (aluminum made)
- ● Fluoric black chrome surface treatment
- ● With stainless steel end plates

High temperature
- ● With stainless steel end plates
- ● With seals for special environment
- ● Specified grease (IKO CG2 grease)
- ◇ High temperature grease

Dust protection (Wooden chips, metal chips, etc.)
- ○ Linear Way H Ultra Sealed Type
- ● With double end seals
- ● With scrapers
- ● With caps for rail mounting holes
- ● With rail cover plate
- ● With female threads for bellows
- ● Bellows

LINEAR MOTION ROLLING GUIDE SERIES FOR SPECIAL ENVIRONMENT

IKO Linear Motion Rolling Guide series for special environment are available in the standard product series as shown below.
For further information, please refer to the catalog of each Linear Motion Rolling Guide series.

Stainless Linear Way L (Type: LWL···B, LWLF···B)

In IKO Stainless Linear Way L, stainless steel is used in the slide unit casing, track rail and other steel components. It is highly resistant to corrosion, and best suited for use in semiconductor-manufacturing devices, medical equipment, and other equipment in clean rooms. Two series are available: the standard LWL···B, and the wide rail type LWLF···B suited for single row arrangement of track rail.

Stainless Linear Way E (Type: LWE···SL)

IKO Stainless Linear Way E is a compact general use linear motion rolling guide, with the slide unit casing, track rail and other steel components made from stainless steel. Highly resistant to corrosion, it is suited for use at places where oil can not be used or under conditions exposed to water splashes. The series includes three types in slide unit shape, three types in length, and nine types in total. The wide range of variations meets diverse needs.

Stainless Linear Way H (Type: LWH···SL)

IKO Stainless Linear Way H is a linear motion rolling guide with high load capacity and high rigidity. Its slide unit casing, track rail, and other steel components are made from stainless steel. Highly resistant to corrosion, it is suited for use at places where oil cannot be used or under conditions ex- posed to water splashes. A wide range of special specifications are available, providing the best solution for problems in various special environments.

Stainless Linear Way F (Type: LWFS···SL)

IKO Stainless Linear Way F is a linear motion rolling guide which achieves endless linear motion of a highly rigid slide unit along a wide track rail. It can support a large moment load in the width direction, because the span between the raceways of track rail is wide. Also, it is suitable for single row rail arrangement.
Its slide unit casing, balls, track rail, and other steel components are made from stainless steel, so it is highly resistant to corrosion. This product is best suited for applications in clean rooms and clean environments such as semi-conductor manufacturing equipment, electric parts mounter, and medical equipment.

Stainless Linear Roller Way Super X (Type: LRXD···SL)

IKO Stainless Linear Roller Way Super X is a linear motion rolling guide, featuring a smooth motion with high reliability, high rigidity and high precision. Four rows of cylindrical rollers are incorporated in a highly rigid casing in good balance, and the rollers in each row are arranged with their rolling axes parallel to each other (instead of crossed at right angles). Stainless steel is used in the slide unit casing, cylindrical rollers, track rail and other steel components. The product is therefore highly resistant to corrosion and best suited for semiconductor-manufacturing equipment, electronic component mounters, medical instruments and other machines in clean rooms. Three types of slide units are available: short, standard, and high rigidity long, which differ in length with the identical cross sectional shape.

Linear Way H Ultra Sealed Type (Type: LWH···M,LWH···MU)

IKO Linear Way H Ultra Sealed Type is a linear motion rolling guide featuring superior sealing performance. The slide unit is provided with specially shaped end seals and under seals, and travels along the track rail with accurately ground seal faces. The combination of the track rail and the slide unit assures high dust-proof performance preventing intrusion of foreign particles and leakage of lubricant. It is effective in use under dusty conditions, such as processing machines for metal, wood and stone as well as general industrial machines. The track rail of MU specification (LWH··· MU) is prepared for fixing the track rail from the bottom side. It has no mounting holes on the top surface of the track rail. Tight contact is achieved between the track rail and the seal, and an even superior sealing performance can be obtained.

OPTIONAL SPECIAL SPECIFICATION FOR SPECIAL ENVIRONMENT

IKO Linear Motion Rolling Guide series with the special specifications shown below are optionally available for various special environment applications. When ordering, add any supplemental codes onto the identification number. These optional specifications can be combined to achieve further improvements in performance.

With double end seals (/V)

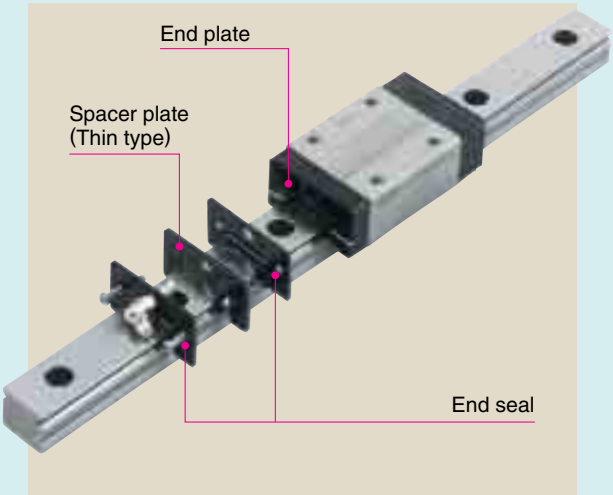

The double seals at the ends of the slide unit are recommended for more effective dust protection.

With scrapers (/Z)

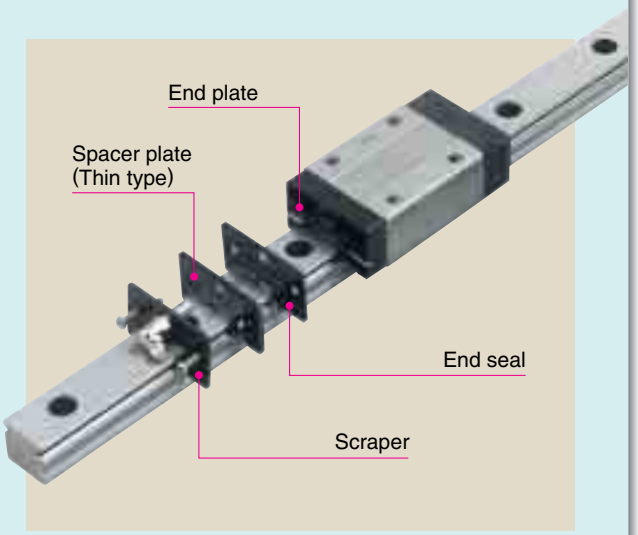

The scraper is used to remove large particles of dust or foreign matter that deposit on the track rail. (Non contact type)

With female threads for bellows (/J)

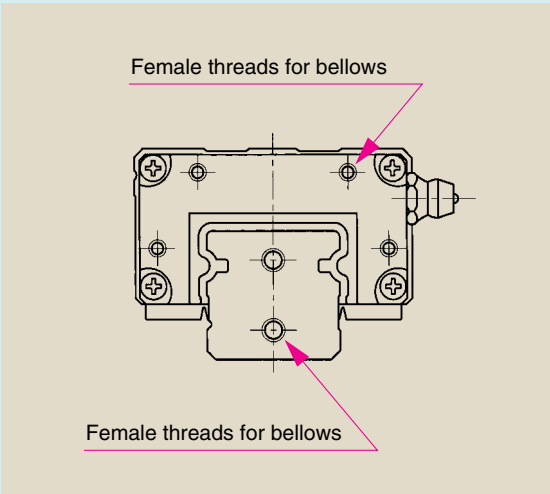

The female threads for attaching the bellows are provided at the ends of the slide unit and track rail.

< Bellows >

This is the protection cover against severe environment conditions such as dusty atmosphere.

With caps for rail mounting holes (/F)

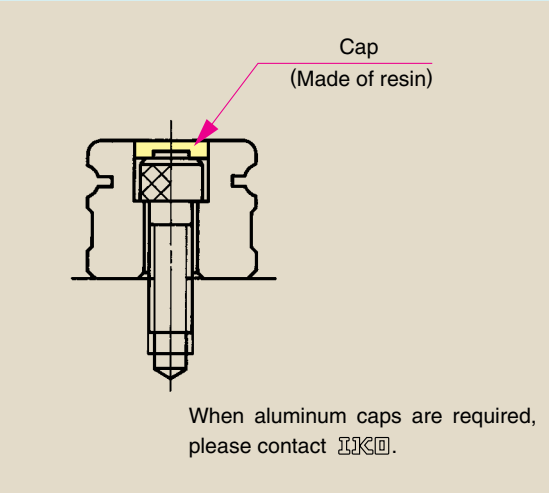

The caps prevent the dust and other harmful foreign matter from accumulating in the rail mounting holes and intruding into the slide unit.

Rail cover plate (/PS)

The rail cover plates prevent foreign matter from intruding into the slide unit through the clearances on top of track rail mounting holes and improve the sealing performance.

Black chrome surface treatment (/LCR)
Fluoric black chrome surface treatment (/LFCR)

Black chrome surface treatment is a process to form a black permeable film on the slide unit and track rail for corrosion resistance and then apply a protective coating of acrylic resin on top of it.
Fluorine black chrome surface treatment is a process to form a black permeable film and then apply a coating of fluorine resin on top of it for further improvement in corrosion resistance. It is also effective in preventing the adhesion of foreign matter on the surface.

※ See page 9.

Capillary plate (/Q)

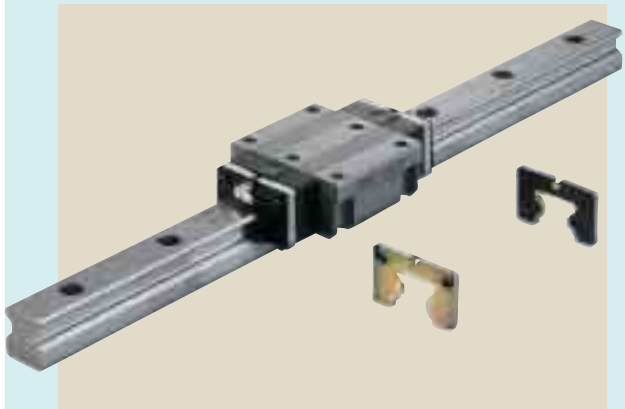

The capillary plate is assembled inside of the end seal in the slide unit. It is impregnated with lubricant so that the re-lubrication interval can be made longer and maintenance time and cost can be saved greatly.
Please operate below 80℃.

※ See page 8.

OPTIONAL SPECIAL SPECIFICATION FOR SPECIAL ENVIRONMENT

With stainless steel end plates (/BS)

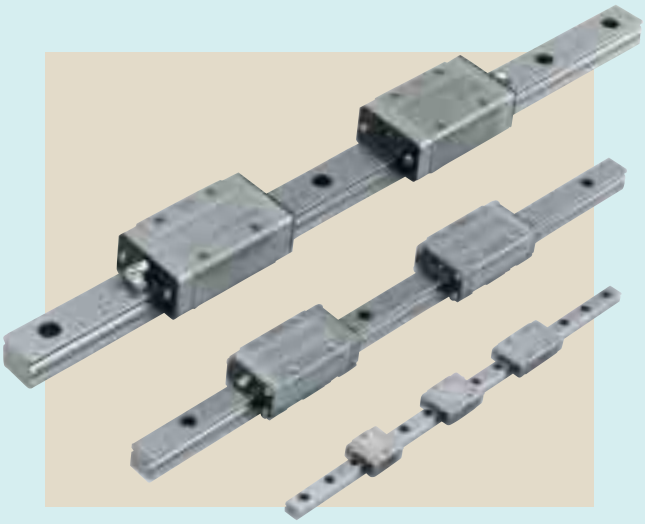

Stainless steel end plates give superior heat resistance. For use at high temperatures, this specification is combined with the specifications of "with seals for special environment" (/RE) and "Specified grease" (/YCG).

With no end seals (/N)

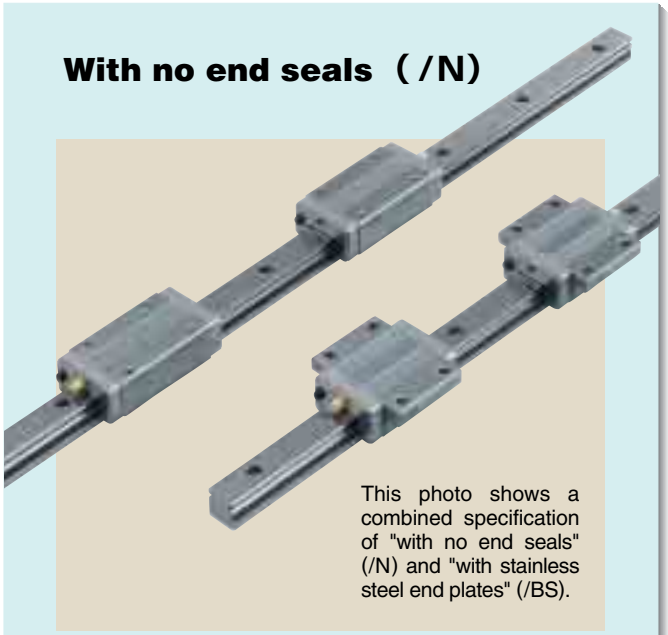

This photo shows a combined specification of "with no end seals" (/N) and "with stainless steel end plates" (/BS).

Steel end pressure plates (not in contact with the track rail) are assembled instead of end seals to reduce frictional resistance.

With seals for special environment (/RE)

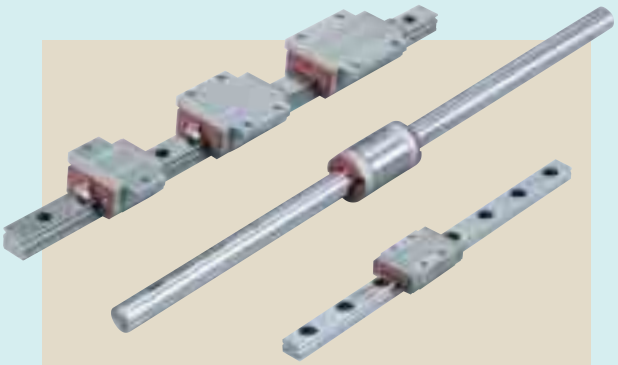

This photo shows a combined specification of "with seals for special environment" (/RE) and "with stainless steel end plates" (/BS).

It is an end seal for special environment that can be used at high temperatures. For use at high temperatures, it is combined with the specification "with stainless steel end plates" (/BS) or "Specified grease" (/YCG).

Specified grease (/YCG)

IKO Clean Environment Grease CG2 is pre-packed in the slide unit in place of standard grease. Clean Environment Grease CG2 is a low dust generating grease having superior lubricating and rust-prevention performances than vacuum grease. It can be used over a wide temperature range from -40 to 200˚C.

※ See page 9.

CAPILLARY PLATE™

Capillary plate

Capillary Plate is an attachment part for new type lubrication. It is a porous resin plate formed by sintering fine resin powder and impregnating a large quantity of lubrication oil in its open pores.

Fixed position type with high accuracy dimension control

Dimensions of Capillary Plate are accurately controlled, and it can be fixed with high precision at the correct position. Uniform contact between the capillary plate and the raceways of track rail can thus be achieved.

Capillary action gives stable lubrication for long periods of time

When the slide unit is stroked, lubrication oil impregnated in Capillary Plate is continuously fed to the raceways in proper amount by capillary action, and can keep stable lubrication for long periods of time.

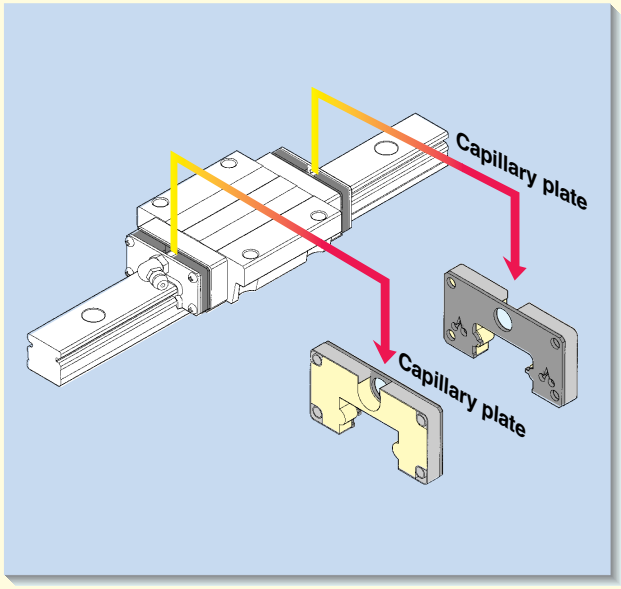

Durability test results of Linear Way and Linear Roller Way with Capillary Plates

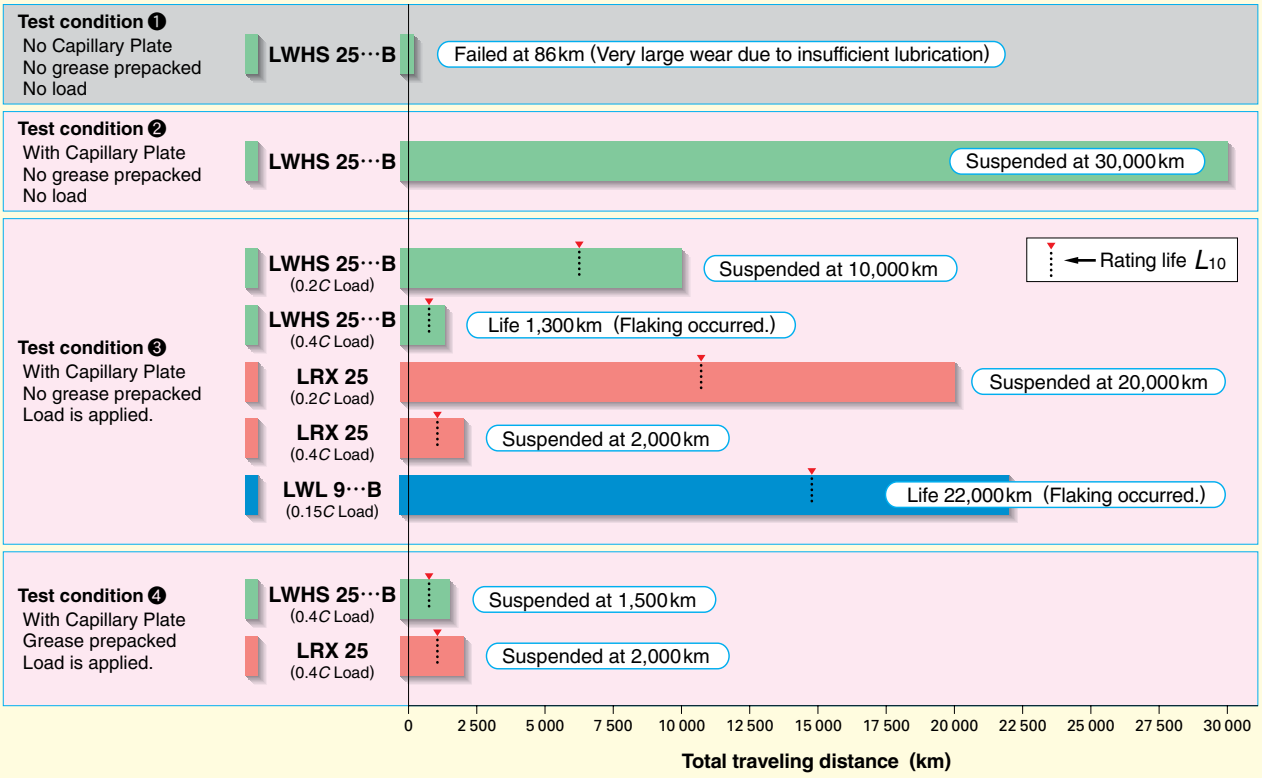

OPTIONAL SPECIAL SPECIFICATION FOR SPECIAL ENVIRONMENT

BLACK CHROME SURFACE TREATMENT

Features

1. The thickness of coating is very thin.
2. The coating is uniform.
3. The adhesion of coating is strong.
4. The coating has superior anti-rust characteristics.
5. Coating is performed at low temperatures, and therefore the coating is free from strain.
6. The coating does not flake off and does not affect the bearing life adversely. Also, the coating can be used in clean room environment.

Comparison results of rust resistance in the humidity cabinet test

Test condition: Temperature: 50℃ Humidity: 95% RH

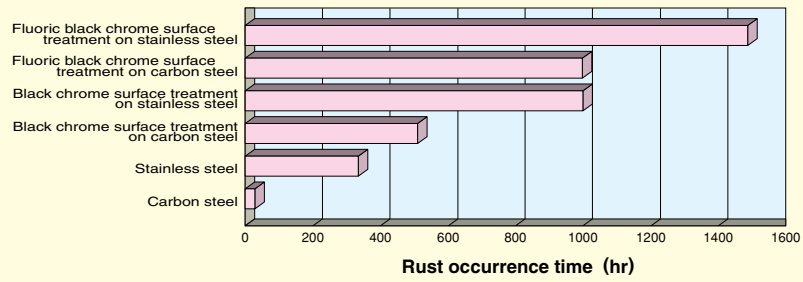

CLEAN ENVIRONMENT GREASE CG2

Features

1. Superior low-dusting performance most suitable for clean room applications
2. Wide allowable temperature range (-40℃ to 200℃)
3. Superior oxidation stability
4. High durability
5. Superior rust prevention performance

Identification number:TG120/CG2 (Tube type: Net 120g)

Identification number:MG10/CG2 (Miniature greaser type: Net 10g)

Dusting Characteristics

Dusting test condition

Test piece	: LWL9
Prepacked grease amount	: 20mg/row of ball circuit
Stroke speed	: 60m/min
Measuring equipment	: Particle counter

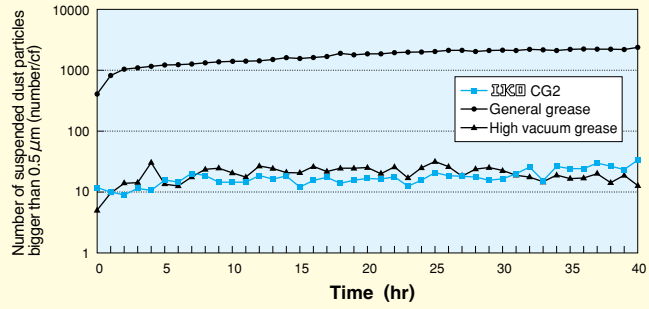

Durability

Durability test condition

Test piece	: LWHS25
Prepacked grease amount	: 1g/row of ball circuit
Applied load	: 8kN
Stroke speed	: 64m/min

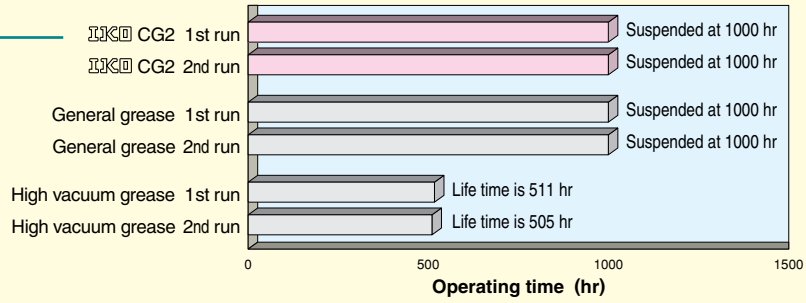

For ordering

IKO

● When placing an order for a Linear Motion Rolling Guide for special environment, please specify the identification number consisting of a model code and any supplemental codes as shown in the examples of identification number indicated below. When several special specifications are required, arrange the supplemental codes in alphabetical order.

Example of identification number of Linear Way and Linear Roller Way

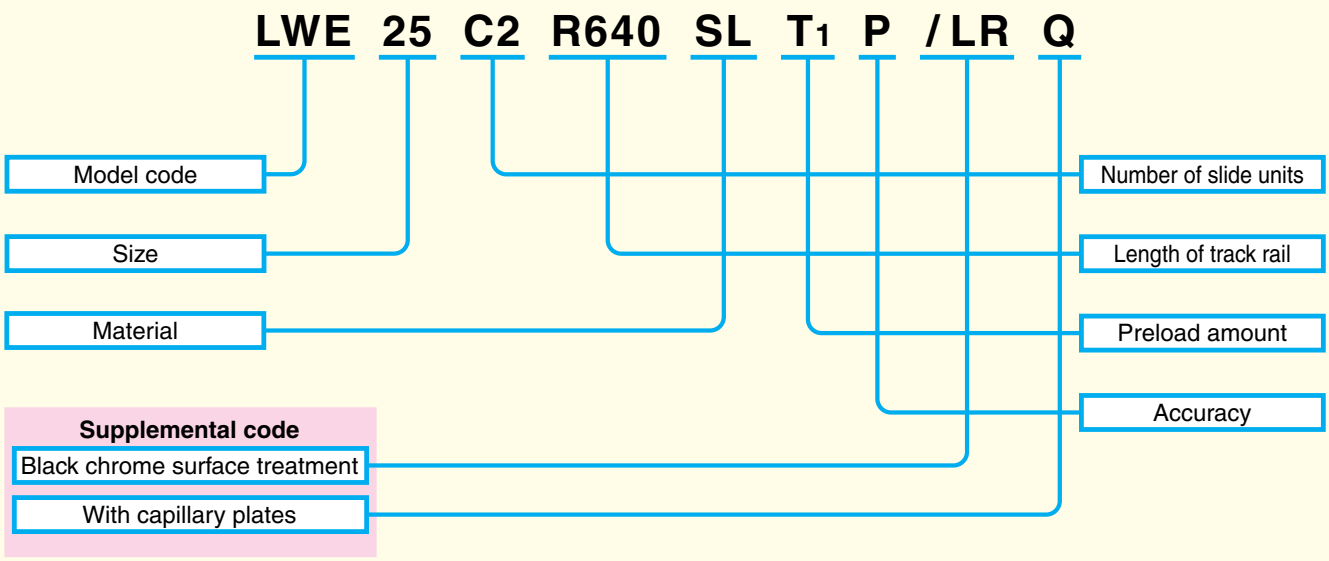

Example of identification number of Ball Spline G

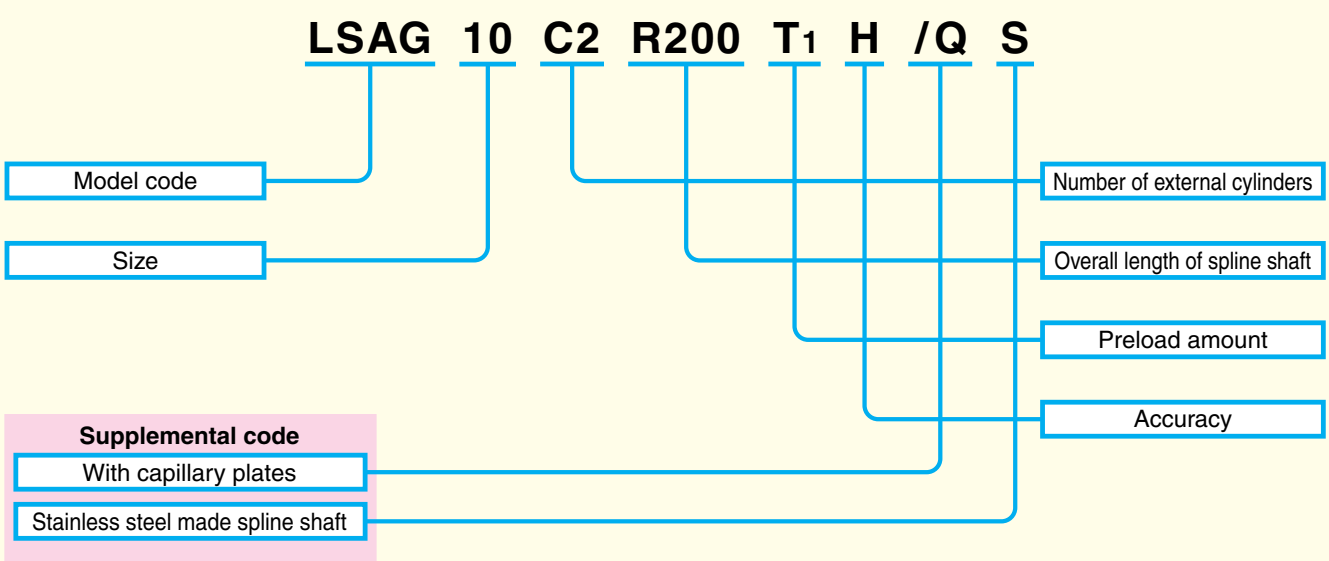

For ordering

● For applicable of Linear Motion Rolling Guide Way for special environment and special specifications for special environment, see Table 1 to 9.

Table 1 Applicable types and sizes of Stainless Linear Way L Series

	Shape of slide unit	Length of slide unit	Model code	Size and applicable range								
	Standard type LWL	Short	LWLC …B (1)	—	3	5	7	9	12	15	20	25
		Standard	LWL …B (1)	2	3	5	7	9	12	15	20	25
		High rigidity long	LWLG …B (1)	—	—	—	7	9	12	15	20	25
	Wide rail type LWLF	Short	LWLFC…B (1)	—	6	10	14	18	24	30	42	—
		Standard	LWLF …B (1)	4	6	10	14	18	24	30	42	—
		High rigidity long	LWLFG…B (1)	—	—	—	14	18	24	30	42	—
Optional special specifications and Supplemental code	Stainless steel end plates		/ BS									
	Black chrome surface treatment		/ LR (2)									
	No end seals		/ N									
	Capillary plate		/ Q									
	Seals for special environment		/ RE									
	Under seals		/ U									
	Specified grease		/ YCG									

Note (1) : "B" is not attached to the model codes of size 2, 3, 4, 6 models.
(2) : / LR shows the surface treatment for track rail only.

Remarks: Linear Way L made of high carbon steel is also available in these types and size.
Applicable size range of special specifications
Steel balls are not retained in these types and size. Seals are not attached either.

Table 2 Applicable types and sizes of Linear Way E Series

	Shape of slide unit	Length of slide unit	Model code	Size and applicable range					
	Flange type LWE	short	LWEC	15	20	25	30	35	—
		Standard	LWE	15	20	25	30	35	45
		High rigidity long	LWEG	15	20	25	30	—	—
	Flange type LWET	short	LWETC	15	20	25	30	35	—
		Standard	LWET	15	20	25	30	35	45
		High rigidity long	LWETG	15	20	25	30	—	—
	Block type LWES	short	LWESC	15	20	25	30	35	—
		Standard	LWES	15	20	25	30	35	45
		High rigidity long	LWESG	15	20	25	30	—	—
Optional special specifications and Supplemental code	Stainless steel end plates		/ BS						
	Caps for rail mounting holes		/ F						
	Female threads for bellows		/ J						
	Black chrome surface treatment		/ LCR (1)						
	Fluoric black chrome surface treatment		/ LFCR (1)						
	No end seals		/ N						
	Capillary plate		/ Q						
	Seals for special environment		/ RE						
	Under seals		/ U						
	Double end seals		/ V						
	Specified grease		/ YCG						
	Scrapers		/ Z						

Note (1) : / L(F)C shows the surface treatment for slide units and / L(F)R for track rails.

Remarks: Stainless Linear Way E is available in these types and sizes.
Applicable size range of special specifications

Table 3 Applicable types and sizes of Linear Way H Series

	Shape of slide unit	Length of slide unit	Model code	Size and applicable range										
	Flange type LWH	Standard	LWH ···B (1)	—	—	—	15	20	25	30	35	45	55	65
		High rigidity long	LWHG	—	—	—	—	20	25	30	35	45	55	65
	Flange type LWHT	Standard	LWHT ···B (1)	8	10	12	15	20	25	30	35	45	55	65
		High rigidity long	LWHTG	—	—	—	—	20	25	30	35	45	55	65
	Block type LWHD	Standard	LWHD ···B (1)	8	10	12	15	—	25	30	35	45	55	65
		High rigidity long	LWHDG	—	—	—	—	—	25	30	35	45	55	65
	Block type LWHS	Standard	LWHS ···B (1)	—	—	—	15	20	25	30	—	—	—	—
		High rigidity long	LWHSG	—	—	—	—	20	25	30	—	—	—	—
Optional special specifications and Supplemental code	Stainless steel end plates		/ BS											
	Caps for rail mounting holes		/ F											
	Female threads for bellows		/ J											
	Black chrome surface treatment		/ LCR (2)											
	Fluoric black chrome surface treatment		/ LFCR (2)											
	No end seals		/ N											
	Rail cover plate		/ PS											
	Capillary plate		/ Q											
	Seals for special environment		/ RE											
	Under seals		/ U (3)											
	Double end seals		/ V											
	Specified grease		/ YCG											
	Scrapers		/ Z											

Note (1) : "B" is not attached to the model codes of size 8, 10, 12 models and stainless steel type models.
(2) : / L(F)C shows the surface treatment for slide units and / L(F)R for track rails.
(3) : Models of size 15 or over are provided with under seals.

Remarks: Stainless Linear Way H is available in these types and sizes. Size 8 and 10 are available in stainless steel made type only.
Applicable size range of special specifications

Table 4 Applicable types and sizes of Linear Way H Ultra Sealed Type

	Shape of slide unit	Model code	Size and applicable range					
	Flange type	LWH ···M(U)	15	20	25	30	35	45
		LWHT···M(U)	15	20	25	30	35	45
	Block type	LWHD···M(U)	15	—	25	30	35	45
		LWHS···M(U)	15	20	25	30	—	—
Optional special specifications and Supplemental code	Stainless steel end plates	/ BS						
	Caps for rail mounting holes	/ F (2)						
	Female threads for bellows	/ J						
	Black chrome surface treatment	/ LCR (1)						
	Fluoric black chrome surface treatment	/ LFCR (1)						
	Double end seals	/ V						
	Specified grease	/ YCG						
	Scrapers	/ Z						

Note (1) : / L(F)C shows the surface treatment for slide units and / L(F)R for track rails.
(2) : This specification is not applicable to LWH···MU.

Remarks: Applicable size range of special specifications

Table 5 Applicable types and sizes of Linear Way F Series

	Shape of slide unit	Model code	Size and applicable range						
	Flange type	LWFH	—	—	40	—	60	—	90
		LWFF	33	37	—	42	—	69	—
	Block type	LWFS	33	37	—	42	—	—	—
Optional special specifications and Supplemental code	Caps for rail mounting holes	/ F							
	Female threads for bellows	/ J							
	Black chrome surface treatment	/ LCR (1)							
	Fluoric black chrome surface treatment	/ LFCR (1)							
	No end seals	/ N							
	Capillary plate	/ Q							
	Under seals	/ U							
	Double end seals	/ V							
	Specified grease	/ YCG							
	Scrapers	/ Z							

Note (1) : / L(F)C shows the surface treatment for slide units and / L(F)R for track rails.

Remarks: Stainless Linear Way F is available in these types and sizes.
Applicable size range of special specifications

Table 6 Applicable types and sizes of Linear Way U

	Model code		Size and applicable range					
	LWU		40	50	60	86	100	130
Optional special specifications and Supplemental code	Black chrome surface treatment	/ LCR (1)						
	Capillary plate	/ Q						

Note (1) : / L(F)C shows the surface treatment for slide units and / L(F)R for track rails.

Remarks: Applicable size range of special specifications

Table 7 Applicable types and sizes of Linear Roller Way Super X Series

	Shape of slide unit	Length of Slide unit	Model code	Size and applicable range									
	Flange type LRX	Short	LRXC (1)	12	15	20	25	30	35	45	55	65	—
		Standard	LRX (1)	12	15	20	25	30	35	45	55	65	—
		High rigidity long	LRXG (1)	12	15	20	25	30	35	45	55	65	100
	Block type LRXD	Short	LRXDC	12	15	20	25	30	35	45	55	65	—
		Standard	LRXD	12	15	20	25	30	35	45	55	65	—
		High rigidity long	LRXDG	12	15	20	25	30	35	45	55	65	—
Optional special specifications and Supplemental code	Caps for rail mounting holes		/ F										
	Female threads for bellows		/ J										
	Black chrome surface treatment		/ LCR (2)										
	Fluoric black chrome surface treatment		/ LFCR (2)										
	No end seals		/ N										
	Rail cover plate		/ PS										
	Capillary plate		/ Q										
	Double end seals		/ V										
	Specified grease		/ YCG										
	Scrapers		/ Z										

Note (1) : LRXC20, LRX20 and LRXG20 can be mounted from the upper side only.
LRXHC20, LRXH20 and LRXHG20 with the same dimensions as those of the above models can be used for mounting from the lower side.
(2) : / L(F)C shows the surface treatment for slide units and / L(F)R for track rails.

Remarks: Stainless Linear Roller Way Super X is available in these types and sizes.
Applicable size range of special specifications

Table 8 Applicable types and sizes of Linear Roller Way X

	Shape of slide unit	Model code	Size and applicable range				
	Block type	LRWX…B	25	35	45	55	75
	Flange type	LRWXH	—	35	54	55	75
Optional special specifications and Supplemental code	Caps for rail mounting holes	/ F					
	Female threads for bellows	/ J					
	Black chrome surface treatment	/ LCR (1)					
	Fluoric black chrome surface treatment	/ LFCR (1)					
	Capillary plate	/ Q					
	Specified grease	/ YCG					
	Scrapers	/ Z					

Note (1) : / L(F)C shows the surface treatment for slide units and / L(F)R for track rails.

Remarks: Applicable size range of special specifications

Table 9 Applicable types and sizes of Ball Spline G

	Shape of external cylinder	External cylinder length	Model code	Size and applicable range													
	Standard type LSAG	Standard	LSAG	2	3	4	5	6	8	10	12	15	20	25	30	40	50※
		High rigidity long	LSAGL	—	—	—	5	6	8	10	12	15	20	25	30	—	—
	Flange type LSAGF	Standard	LSAGF	2	3	4	5	6	8	10	12	15	20	25	30	40	—
		High rigidity long	LSAGFL	—	—	—	5	6	8	10	12	15	20	25	30	—	—
Optional special specifications and Supplemental code	Stainless steel end plates		/ BS														
	No end seals		/ N														
	Capillary plate		/ Q														
	Seals for special environment		/ RE														
	Stainless steel made spline shaft		/ S (1)														

Note (1) : Not applicable for hollow shaft models.

Remarks: Hollow shaft models are available in these types and sizes.
Applicable size range of special specifications
※ Consult IKO for further information.

● *Interchangeable specification products for special environment*

IKO Linear Rolling Guide series includes interchangeable specification products, of which slide units (external cylinders) and track rails (spline shafts) can be handled separately and combined freely. Interchangeable specification products with special environment specifications are also available. Consult IKO, if these products are required .